PROCEEDING OF SECOND SYMPOSIUM
ON
SHARING OF COMPUTER PROGRAMS AND TECHNOLOGY IN NUCLEAR MEDICINE

Oak Ridge, Tennessee, April 21-22, 1972

P. HAMOSH M.D.

Abstract

Instrumentation for Pattern Recognition and Associated Software

by

Robert S. Ledley and Louis S. Rotolo

In this paper we describe the biomedical pattern recognition system of the National Biomedical Research Foundation. The hardware portion of the system consists of a high-resolution flying-spot scanner (FIDAC), a vidicon scanning system with associated silicon video memory system (VIDIAC), a mechanical scanner of very great resolution (DRIDAC), a microscope scanning system (SPIDAC), and an interactive communication system (MACDAC). The associated software systems used in the operation of the above hardware systems and in the automatic pattern recognition consist of FIDACSYS, which supervises input of the image into the computer from the scanning devices and accomplishes overall picture manipulation, and the SYNTAXSYS and BUGSYS pattern-recognition languages developed at the Foundation. Finally, a system (DOCS) is described which is used for on-line computer-console interaction with disk memories for the evaluation and display of large masses of data.

April 21, 1972

National Biomedical Research Foundation
Georgetown University Medical Center
3900 Reservoir Road, N. W.
Washington, D. C. 20007

10035457227

Source: https://www.industrydocuments.ucsf.edu/docs/qhdm0000

Instrumentation for Pattern Recognition and Associated Software*

The pattern recognition system of the National Biomedical Research Foundation consists of a number of scanners, display consoles, and interactive devices. The laboratory is centered around an IBM 360/44 computer (owned by the Foundation), which is used on a "dedicated" basis. The figures show the organization of the specialized pattern-recognition equipment of the laboratory (see Figs. 1, 2, and 3).

All of the equipment (except the IBM 360/44 computer) is of our own design and construction; either it was not available from commerical electronic manufacturers or its requirements exceeded the specifications of available apparatus. All of the scanners and interactive displays are integrated into a single configuration through the Pattern Recognition Control System. The SPIDAC (Specimen Input to Digital Automatic Computer) consists of an automated microscope with a motorized stage which is under computer control in both the x and y directions; it includes an instantaneous automatic-focus device. The VIDIAC (Vidicon Input to Automatic Computer) scans the image at high resolution and stores it temporarily on the Silicon Video Memory System (the heart of which is a new image-converter tube). The stored image can then be read directly into the computer's memory (through the Pattern Recognition Control System), or displayed on the grey-level TV monitor or the MACDAC interactive monitor. The MACDAC (Man Communication with Digital Automatic Computer) enables interactive communication with the computer by means of a "joy stick" cursor. The FIDAC (Film Input to Digital Automatic Computer) is a flying-spot scanner for scanning film transparencies at very high resolution; it is also used to make a print or film negative under the control of the computer, with high spatial and grey-level resolutions. The DRIDAC (Drum Input to Digital Automatic Computer) is a mechanical scanner of very great resolution in which a picture or X ray is wrapped around a drum and scanned by several photocells moving along a worm gear as the drum rotates.

All of the object scanning units (namely the VIDIAC, FIDAC, and DRIDAC) have systems that image and digitize the object picture; the digitized information can be sent to the core memory of the computer. Also, each of the scanned images can be stored on the Silicon Video Memory, in either video (analog) or digital form (i.e., a particular grey level or levels); many options can be selected by the user. From the Silicon Video Memory, the stored image can be displayed with grey levels on the TV monitor. The scanned images can also be stored on the MACDAC monitor (which is a storage tube). Then an interactive-graphics phase of a program can be performed in which the operator can present to the computer the x and y coordinates of a point, and

10035457728

*This work was supported by U. S. Public Health Service grants GM-15192, GM-10797, HD-05361, and RR-05681 from the National Institutes of Health to the National Biomedical Research Foundation.

Source: https://www.industrydocuments.ucsf.edu/docs/qndm0000

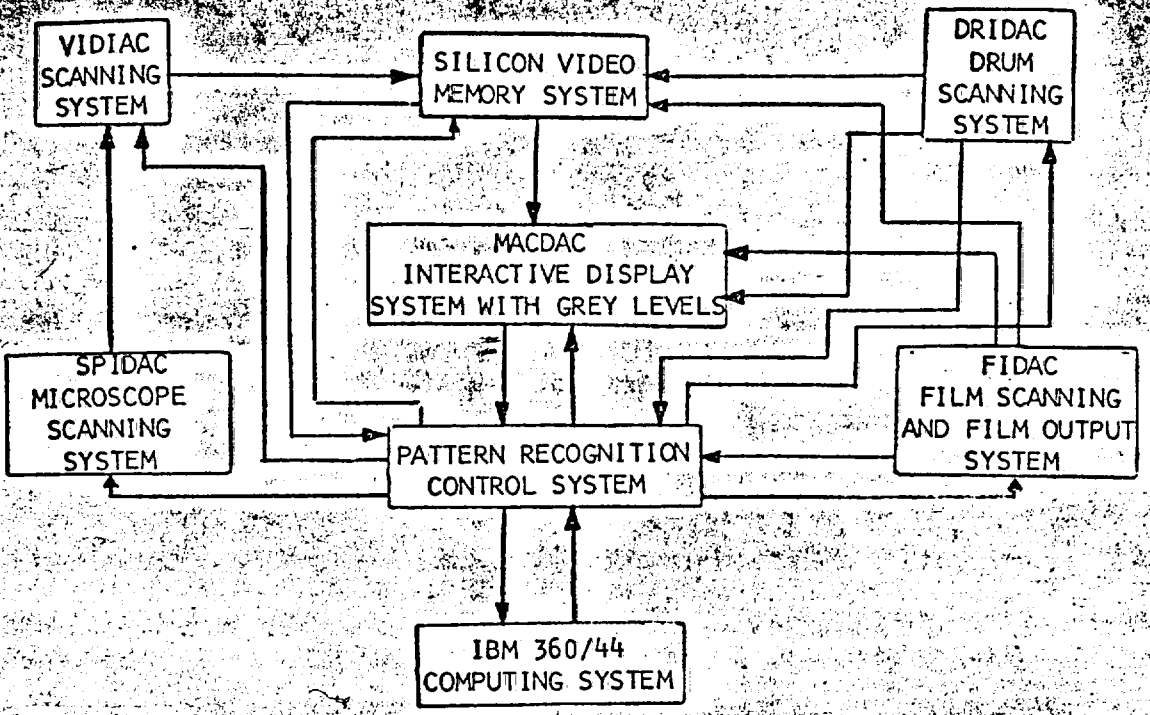

Fig. 1. National Biomedical Research Foundation Automatic Pattern Recognition and Computing Laboratory.

1003545729

Source: https://www.industrydocuments.ucsf.edu/docs/qhdm0000

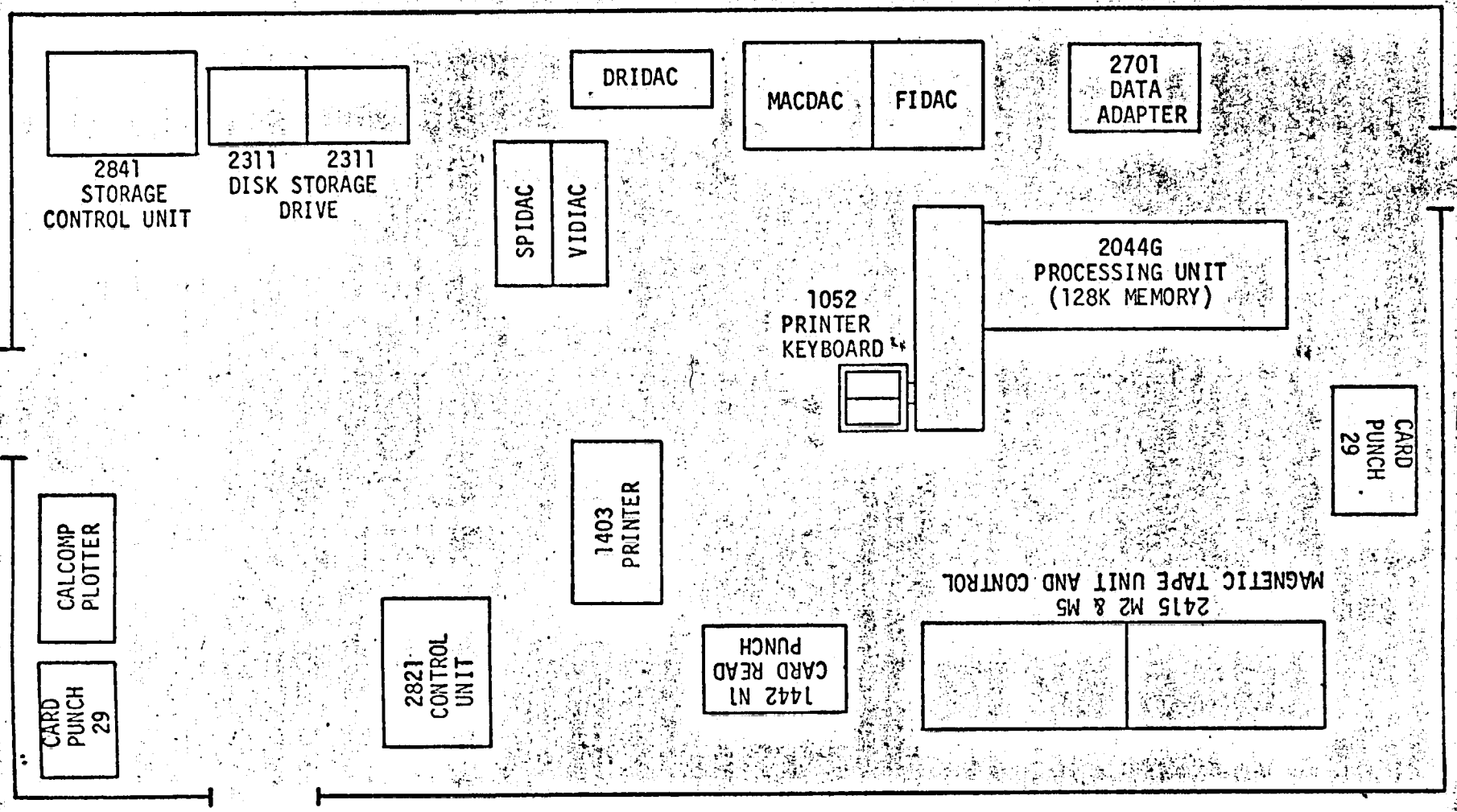

Fig. 2. Layout of the National Biomedical Research Foundation Pattern Recognition Laboratory and Computer Center.

Source: https://www.industrydocuments.ucsf.edu/docs/qndm0000

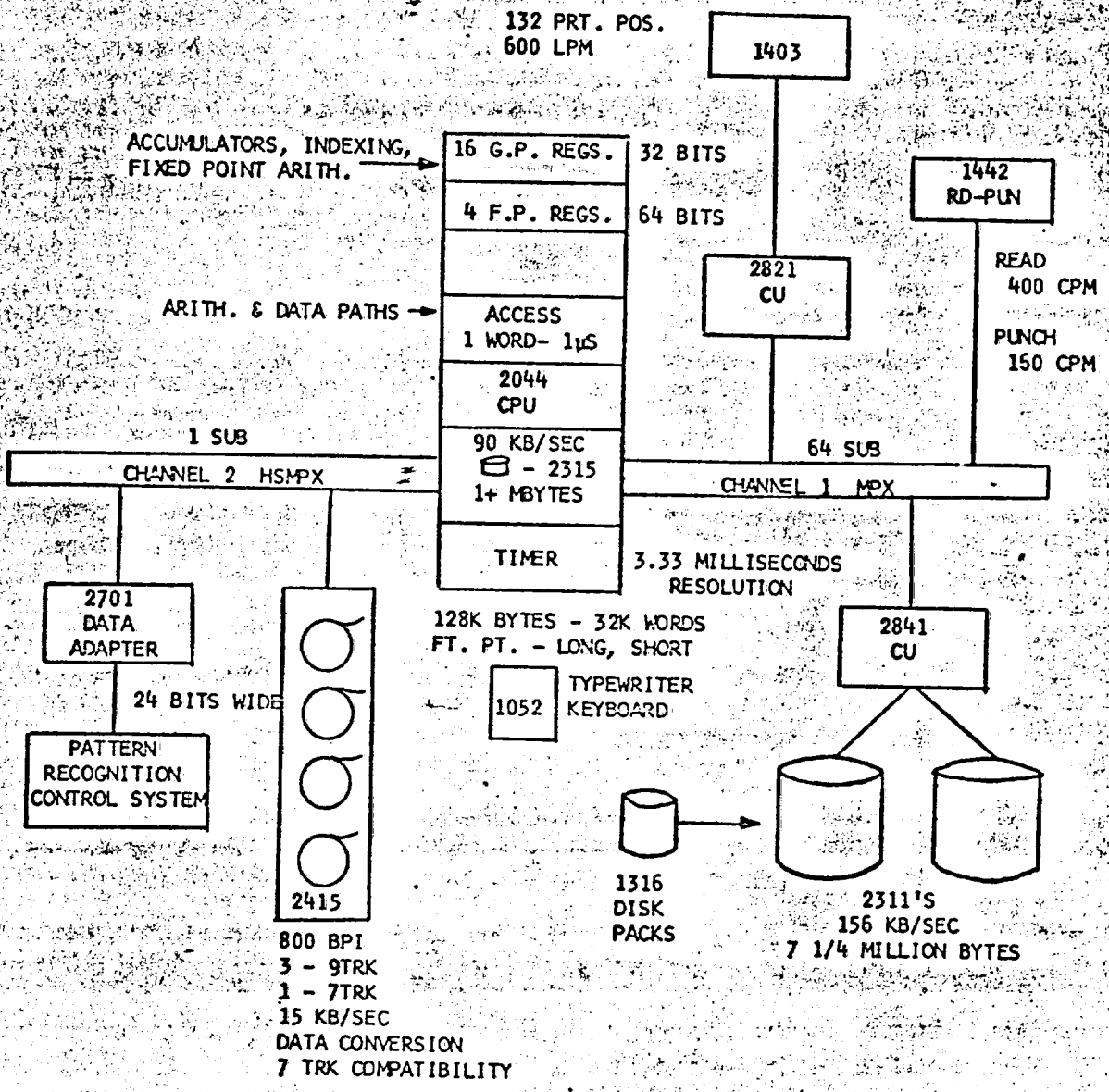

Fig. 3. National Biomedical Research Foundation 360/44 Configuration.

10035457231

Source: https://www.industrydocuments.ucsf.edu/docs/qhdm0000

some coded information concerning the nature of the point. Finally, the computer itself can draw a picture on the MACDAC monitor, or on the TV monitor via the Silicon Video Memory System (or on a hard-copy printer via the Silicon Video Memory System). Thus the computer can present a MACDAC display, a TV monitor grey-level display, a hard-copy grey-level display, and a high-resolution grey-level display on film by means of the FIDAC.

The specialized pattern-recognition equipment of the laboratory includes:

(a) FIDAC (Film Input to Digital Automatic Computer) Mod II. The FIDAC is a high-speed high-resolution flying-spot scanner developed and built at the Foundation. It has a maximum capability of scanning a raster of 2000 x 2000, or 4,000,000 sample points within four seconds (i.e., at the rate of one microsecond per sample spot), with up to 16 grey levels per point. The number of sampled spots in the raster is adjustable, as is the number of grey levels. For instance, for the analysis of chromosomes by classical (nonbanding) methods, a nominal 700 x 500, or 350,000 sample-spot, raster is most efficacious. The analysis of fluorescent chromosomes is always accomplished from film, for the fluorescence fades as it is exposed to ultraviolet light. Thus a photomicrographic film is made in which the fluorescence from all the chromosomes can be recorded at the same time. (See Fig. 4.)

The FIDAC has two modes of operation, as follows: (1) A complete picture mode. In this mode the raster's size is nominally 700 x 500, that is, the picture is sampled at 350,000 spots, and each point can be sampled as black-and-white binary, i.e., one bit per spot, or up to 16 grey levels, i.e., four bits per spot. This raster size is used for the examination of biomedical photomicrographs which were obtained from an optical microscope, since this sampling rate exceeds the resolution of the optical microscope. (2) Control word mode. In this mode of operation a resolution of 2,048 spots across each of 1,365 rows (3 x 2 aspect ratio) with a maximum of 16 intensity grey levels can be obtained. This is accomplished by allowing the computer program to select all or any portion of the picture to be scanned with a corresponding sampling density such that the memory space allocated to the picture would not be overrun.

The specifications of FIDAC are as follows: A 35-mm still-frame film transport is used which can take up to 250 frames. The film frames can be advanced automatically under computer control. The logical circuitry utilizes integrated circuits soldered to printed circuit cards that are plugged into racks for ease of maintenance. The system is of our own design, completely synchronous, and can be clocked at any frequency up to 10 megahertz. The circuitry is geared to an easily adjustable master clock. Thus the clock speed can be increased or decreased, depending upon the characteristics of the computer to be used. The circuitry matching FIDAC to the computer consists of several replaceable cards. These FIDAC-computer interfacing cards are the only circuitry that would have to be changed in shifting from one computer system to another. The spot size is 1.5 mils at one foot-Lambert light output (measured on the face of the CRT). At the 1.5 mil spot size and at 2,000 spots per x-sweep of the raster, there is no overlap of spots because the x-scan raster is 3 inches wide. The rise time of the photomultiplier is 2.3 nanoseconds, the video-amplifier bandpass is 10 MHz (megacycles), and the phosphor persistence is 100 nanoseconds. Thus one sample spot per microsecond clearly presents non-overlapping spots. Dynamic focusing is incorporated in FIDAC. This presents an almost constant spot size from the center to the sides of the CRT. The sampling rate used is 1 microsecond per spot. This means that the four-bit 16-grey-level analog-to-digital conversion takes place completely within this time period. One frame is scanned in about 0.35 seconds for complete picture mode (700 x 500 raster), and

10035457732

Source: https://www.industrydocuments.ucsf.edu/docs/snbd0000

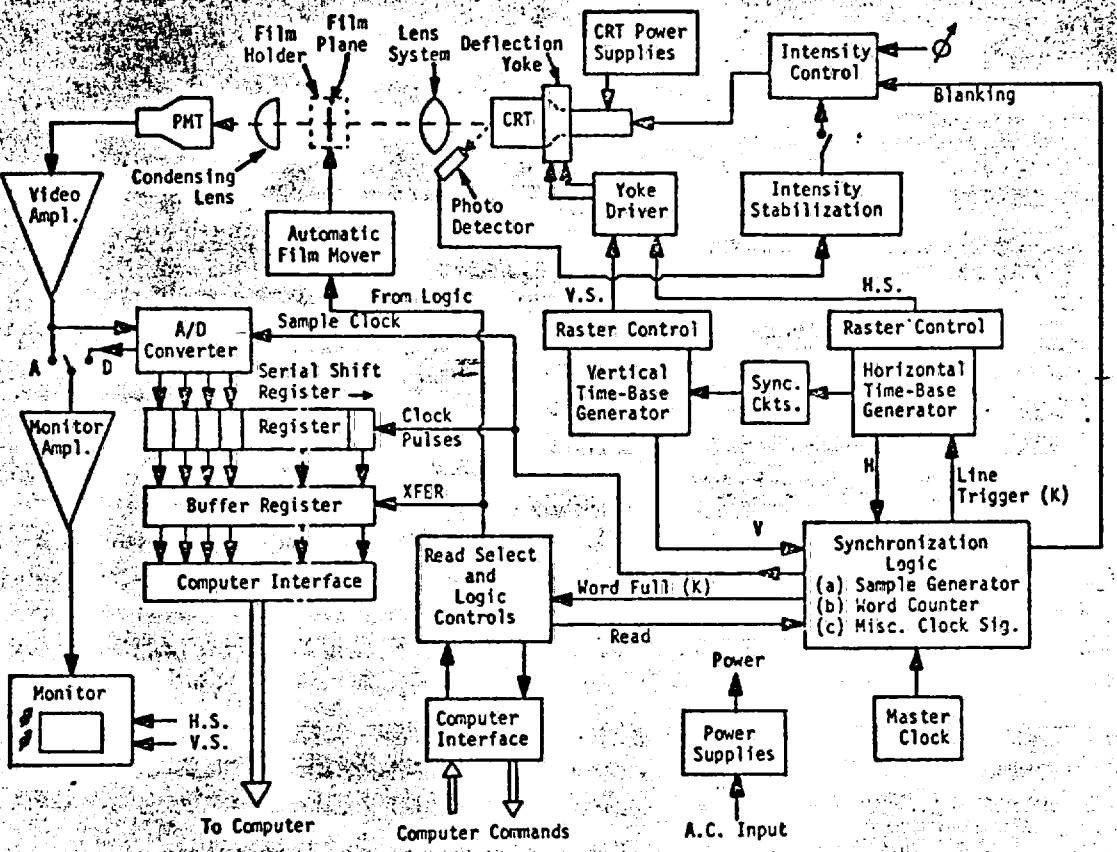

Fig. 4. The Basic FIDAC System.

10035457733

Source: https://www.industrydocuments.ucsf.edu/docs/[illegible]

three seconds for a 2,000 x 1,365 raster. Jitter is related to the synchronization of the triggering of each successive line of the raster. The jitter of the FIDAC is less than 1 spot. Antipincushioning coils are included in both the x and y directions. By aspect ratio is meant the ratio of the distance between adjacent spots in the horizontal and vertical directions. It is usually desired to keep this at unity in order that no vertical or horizontal distortion occurs. On FIDAC the aspect-ratio is retained when the raster size is changed. The FIDAC can be used with 2 through 16 grey levels for each spot. Each grey level can be set within 0.1%. Shading refers to the correction of the grey-level variation across the area of the picture that arises from the CRT, photomultiplier, and optical systems. For the FIDAC, the shading generator can be adjusted so that for a blank frame an almost uniform response is obtained across the whole frame. If successive scans are made on the same picture frame, then the starting point, or very first spot, on such successive frames will be at the same place in the picture frame to within one spot diameter. The raster size can vary from line to line in length of line or in the rate of scanning within the line. The stability of such possible errors is within one spot diameter. The cutoff voltage of each level detector is stable within .01%. The drift in the output of the video amplifier has been stabilized to maintain a constant output for a given input signal. A feedback loop adjusts the average integrated CRT-spot intensity of the frame to a constant value.

(b) VIDIAC (Vidicon Input to Automatic Computer). The VIDIAC device was also designed and constructed by our electronic laboratory either for scanning through a microscope or for scanning large pictures or X rays. It consists of a high resolution vidicon system that scans at standard TV rates (i.e., 1/30 sec/frame), coupled to a Silicon Video Memory System. The standard vidicon scan rate is too fast for most analog-to-digital conversion systems and for data transmission to a digital computer. Hence the Silicon Video Memory System acts as an interface between the vidicon and the computer. The capabilities of the VIDIAC are as follows. The image scanned by the vidicon can be displayed on a TV monitor for viewing and for optimizing such parameters as focus, intensity, contrast, etc. The image scanned by the vidicon can be written onto the Silicon Video Memory System. The electronic image as stored in this silicon memory can in turn be internally scanned and displayed on either the TV monitor or on the storage tube of the MACDAC. A zoom control on the silicon memory and a bias control on the console of the MACDAC can be used to display any portion of the electronic image or to read into the computer any portion of the image. This zoom feature is also under computer control. The standard vidicon scan rate of 1/30 sec. per frame is equivalent to about a 30 megahertz spot sampling rate; this fast scan is the rate from the vidicon to the silicon memory tube and from the silicon memory to the TV monitor. The equivalent spot sampling rate from the silicon memory to the computer or to the MACDAC, or of writing onto the silicon memory from the computer, called the slow scan, is a maximum of a megahertz, but frequently 1/3 megahertz is used. Switching the flow of information between the vidicon, TV monitor, MACDAC, and computer, together with the appropriate scan rates, is under both manual and computer control. (See Fig. 5.)

(c) SPIDAC (Specimen Input to Digital Automatic Computer). The SPIDAC is an instrument for scanning directly through a microscope, digitizing the resulting grey-level pattern, and placing the digitized image directly into the computer's memory. The system is able to automatically manipulate the microscope slide in both the x and y directions, record the coordinates of objects of interest, automatically focus the image instantaneously, and monitor results, all under computer control. Eliminating the photographic

10035457234

Source: https://www.industrydocuments.ucsf.edu/docs/qhdm0000

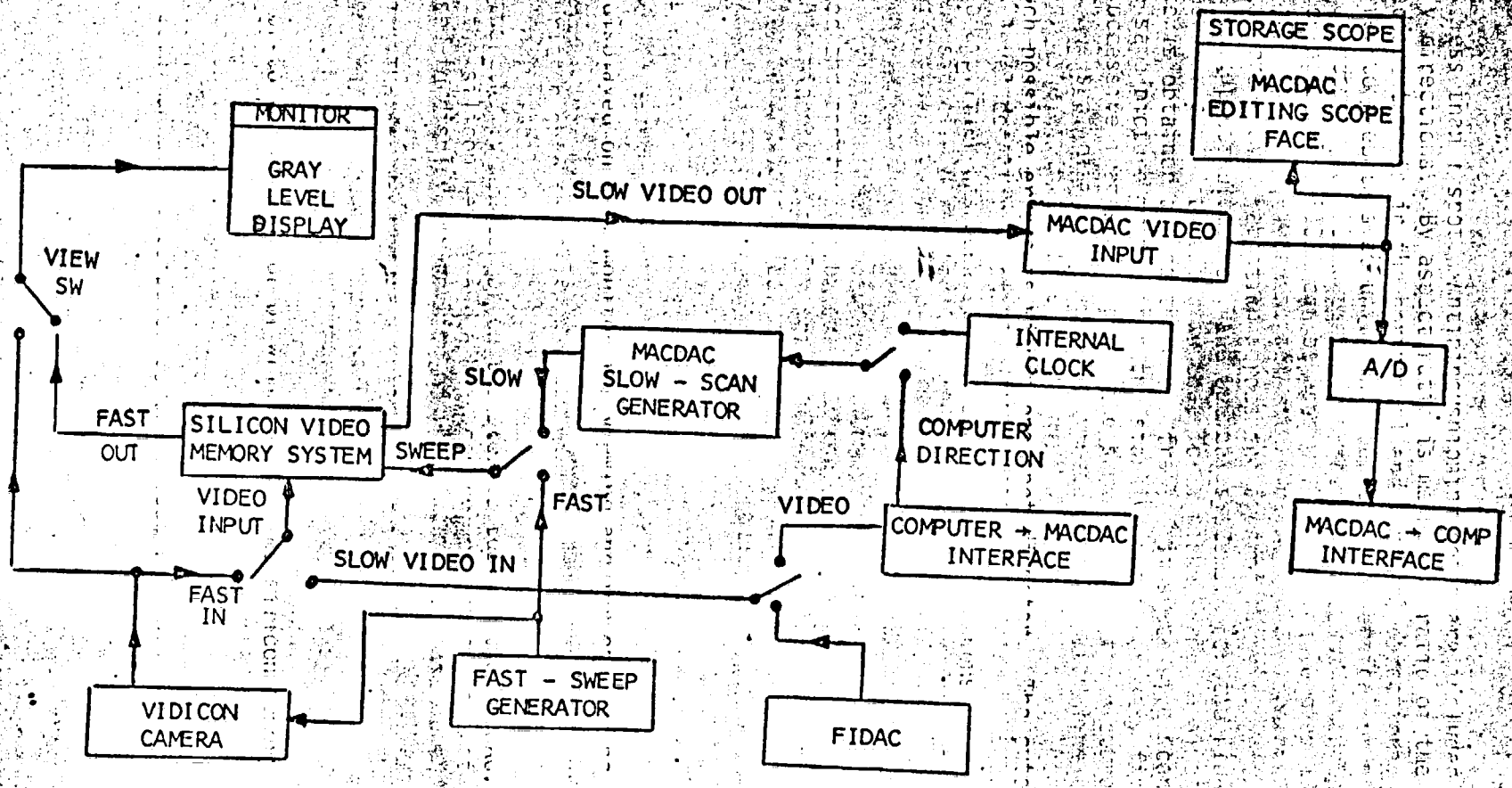

Fig. 5. Block Diagram of VIDIAC System.

1003545735

Source: https://www.industrydocuments.ucsf.edu/docs/qphm0000

step has the advantage of saving time and effort. Also, in a number of instances it is possible that such direct digitization may bring more sensitivity to grey-level discrimination and can eliminate certain possible grey-level distortions which can occur when using film as an intermediate step. (See Fig. 6.)

One of the main functions of the SPIDAC is to locate specimens of interest on the glass slide by automatic means, provided that an object of interest can be specified utilizing pictorial parameters. The SPIDAC system performs its operation in two phases. During the first phase a coarse scan (40x objective) is made to determine where the objects of interest are located. During the second phase a final and more accurate determination (at 100x objective) is made of whether or not the object located in the first stage is of sufficient interest to be automatically analyzed, and if so then its image is scanned by the VIDIAC and digitized and read into the computer. The pattern-recognition programs in the computer are utilized to compute the desired quantitative information from the pictorial data. The 40x and 100x objectives are parfocal, and a filter is introduced when the 100x is in place so that no adjustment of the vidicon is necessary when going from 40x to 100x objective.

In particular, SPIDAC scans a 1 cm x 1 cm field on the glass slide. At 40x objective, the frame size is 200μ x 260μ, giving about 40 strips of 50 frames each (or 2,000 frames) over the 1 cm^2 area field. Each of the x and y stepping motors is run at a rate of 650 steps/second, with 200 steps/revolution, moving the stage 500μ/revolution. This amounts to 2.50μ/step, meaning that we can locate any point in the field to the nearest 1.25μ. The rate of movement is (650 x 500) ÷ 200 = 1,625μ/second, or 10,000 ÷ 1,625 or about 6 seconds/strip, or finally 6 x 40 = 240 seconds for the 40 strips of the field. To move from strip to strip will take a total of 6 seconds across the field, so the total scan time limitation due to the motors themselves is 246 seconds or 4 minutes and 6 seconds. In addition, each field is examined (in the first phase as described above) for a chromosome spread, and this takes (1/30) second per frame, or 2,000 x (1/30) = 66.6 seconds or 1 minute and 6.6 seconds. Thus the total time that SPIDAC takes to search a 1 cm x 1 cm field area for chromosome spreads is 5 minutes and 12.6 seconds.

(d) MACDAC (MAn Communication with Digital Automatic Computer). The MACDAC is an interactive-graphics device designed and constructed by us for communicating with the computer. Automatic chromosome analysis involves a limited but essential manual "editing" step which is accomplished by means of the MACDAC. After the computer console is properly set up, the control of the complete chromosome analysis is carried out by the operator at the MACDAC console. The expanded MACDAC will include a hard-copy grey level picture printer. Two monitors are available to the MACDAC. The first is a Tektronix storage tube capable of only black and white (actually green) display; the second is a TV monitor capable of grey level display. The interaction is carried out by means of a joy stick controlled cursor. For any position of the cursor, its 10-bit x and 10-bit y coordinates can be read into the computer, together with a four-bit code set by the operator, on a priority interrupt basis. This four-bit code identifies for the computer the meaning of the x and y coordinates. The interrupt capability allows the relatively slow interactive editing process to be carried out at the same time as the computer is executing an analysis program, on an overlapping basis. (See Fig. 7.)

10035457 36

Source: http://www.industrydocuments.ucsf.edu/docs/pdbn0000

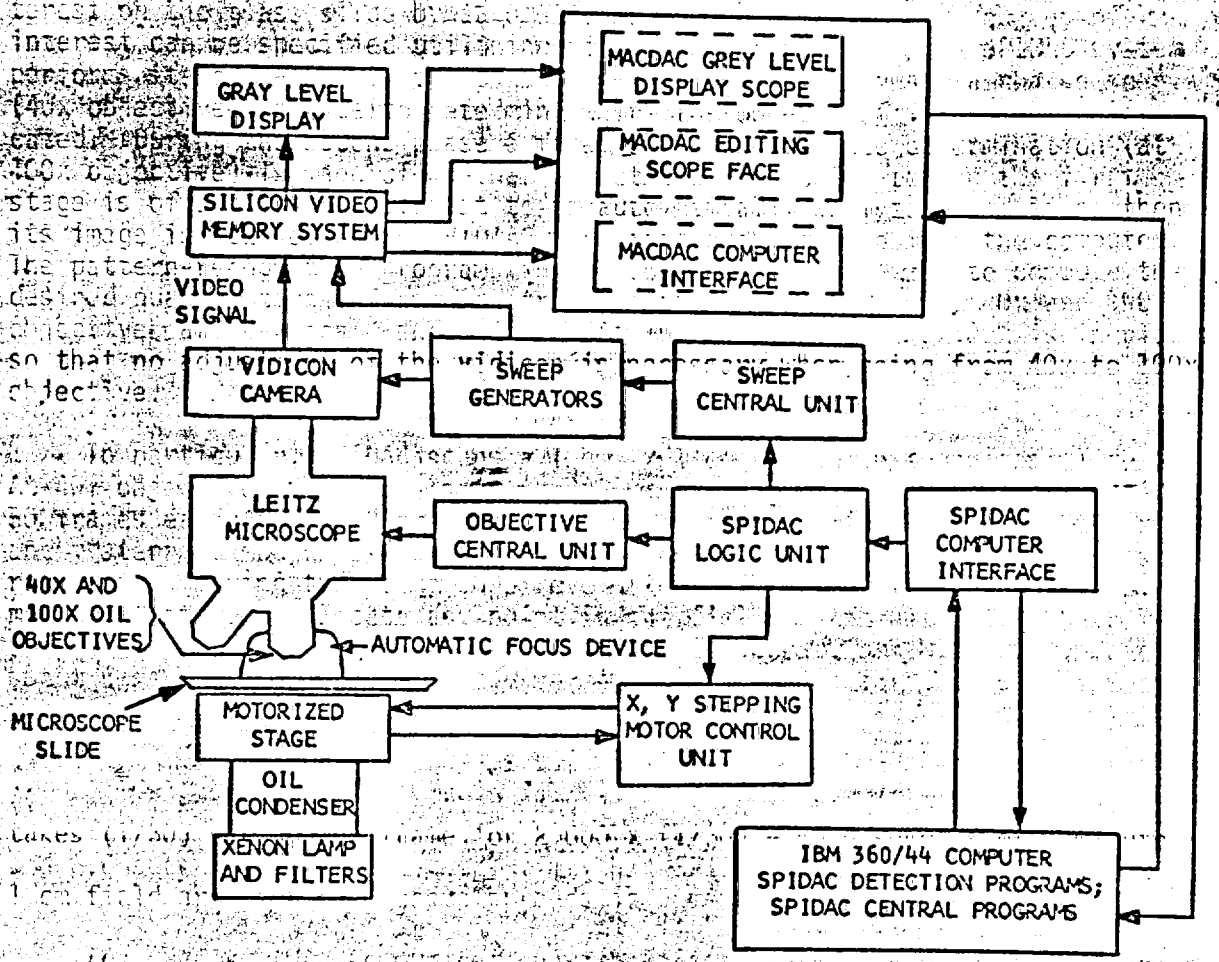

Fig. 6. Block Diagram of SPIDAC system (including the associated parts of MACDAC and COMPUTER hardware and software).

1003545737

Stanford University Industry Documents Library

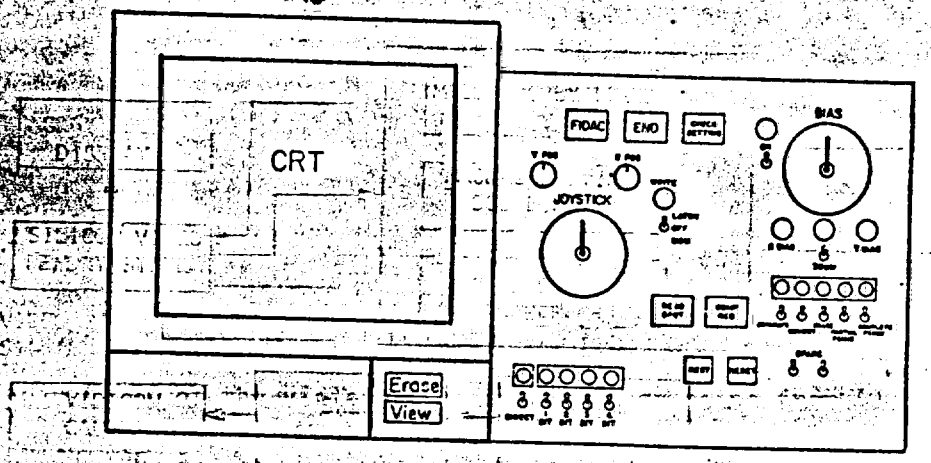

Fig. 7. (a) MACDAC Console: At left is the display tube; at right, the control panel. The lower left (main) joystick controls the cursor; the upper right (bias) joystick controls the zoom feature. The line of five switches below the bias joystick controls the four-bit code which is read in with the coordinates when the "Read Spot" button is pushed. Other, nonstandard codes can be set by means of the five switches below the main joystick.

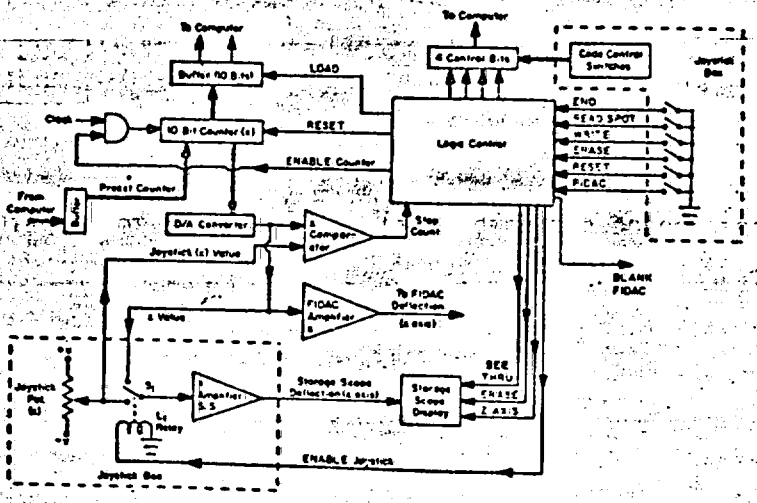

(b) Some Details of the MACDAC Design.

10035457738

Source: https://www.industrydocuments.ucsf.edu/docs/qndd0226

The MACDAC has two joy sticks, one for normal interaction, and the second for zoom control. The zoom control enables any area of the display to be enlarged so that detail can be more easily observed. The MACDAC console includes switches to control the scan of the FIDAC or VIDIAC, to tell the computer that the interactive procedure has been completed, to direct the computer to display a picture on the monitors, to tell the computer to enable the use of the joy sticks, and so forth. Either the analog video signal or the digitized signal can be displayed on the MACDAC. For the digital signal, any particular grey level can be seen, or any grey level above a certain cutoff level can be displayed, and so forth.

(e) DRIDAC (DRum Input to Digital Automatic Computer). Many pictures of biomedical importance are produced in relatively large sizes, both as transparencies and black and white prints. Some examples are large chest X-ray plates, X rays of large bones, X-ray crystallographic plates, angiograms, graphs such as electroencephalographs and electrocardiographs, and many others. The DRIDAC device was designed and built at the National Biomedical Research Foundation to allow such pictures to be directly read in to a digital computer. (See Fig. 8.)

DRIDAC is a high-speed, high-resolution, on-line drum scanner which can scan photographs (X ray, transparency, or print) of any size up to sixteen inches by twelve inches of useful area. The resolution may be varied to as fine as 0.004 inches. This allows it to sample 4,000 x 3,000 spots, for a total of 12 million spots, from a large picture. Each spot can be digitized as required into one bit (black and white) or up to six bits (sixty-four grey levels per spot). An automatic background detection and compensation feature when activated affords a much greater dynamic range and in effect increases the number of grey levels. Another innovation in our drum scanner is the utilization of two read stations (see figures) thereby reducing the total scan time to one-half the time required by a single read station.

In consideration of the large quantity of data which can be obtained from a single picture, we have designed the DRIDAC device to read the pictorial data into the core memory of our IBM 360/44 computer at a maximum rate of 252,000 bits per second and simultaneously transfer the accumulating data from the core into the IBM 2311 disk drive pack (see Fig. 9). Since a 2311 disk pack will store approximately 54 million bits, this requires a slight reduction in grey-scale resolution if we are to read in a full 4,000 x 3,000 spot picture.

The DRIDAC's drum speed is 420 rpm and its sampling rate is approximately 35 microseconds per spot. Thus to read in an entire picture requires approximately five minutes. The DRIDAC's high speed in getting a large quantity of data onto the disk saves valuable computer time. Once the data is on the disk, the program can select any desired portion of the picture at disk speed. It would be inappropriate to process data directly from the drum scanner, since backtracking or moving to distant spots under the control of the computer is slow and would therefore waste computer time.

Of no less importance than the hardware (or computer instrumentation) is the associated software (or computer programming) systems that we have developed and are available for use in this work. Since the programming systems or languages are extremely extensive and complex, we can only give the "flavor" of the languages in the following discussions. These software systems include:

The specialized pattern-recognition software of the laboratory includes:

1003545739

Source: https://www.industrydocuments.ucsf.edu/docs/qhdm0000

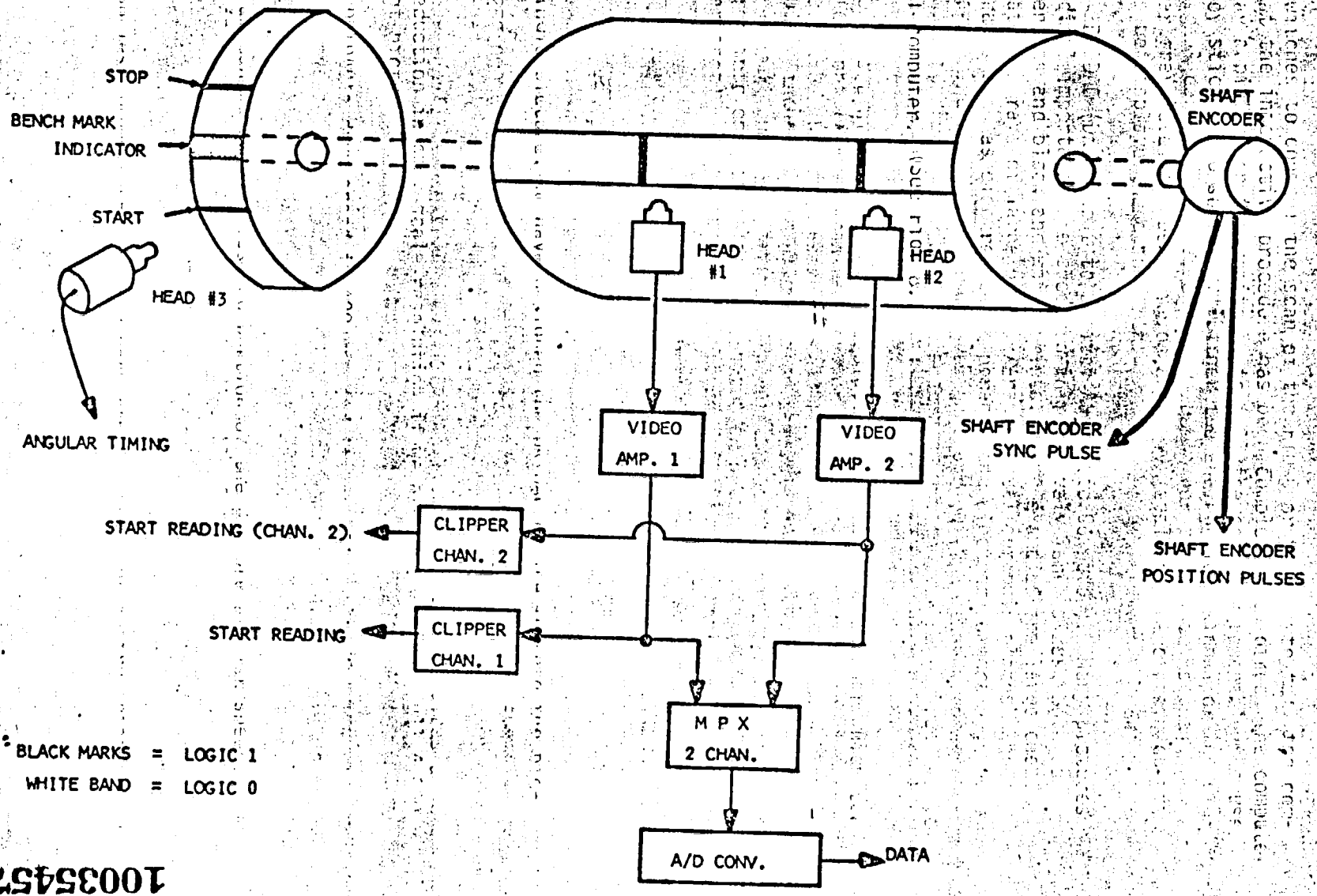

Fig. 8. DRIDAC System.

Source: https://www.industrydocuments.ucsf.edu/docs/qhcm0000

1003545740

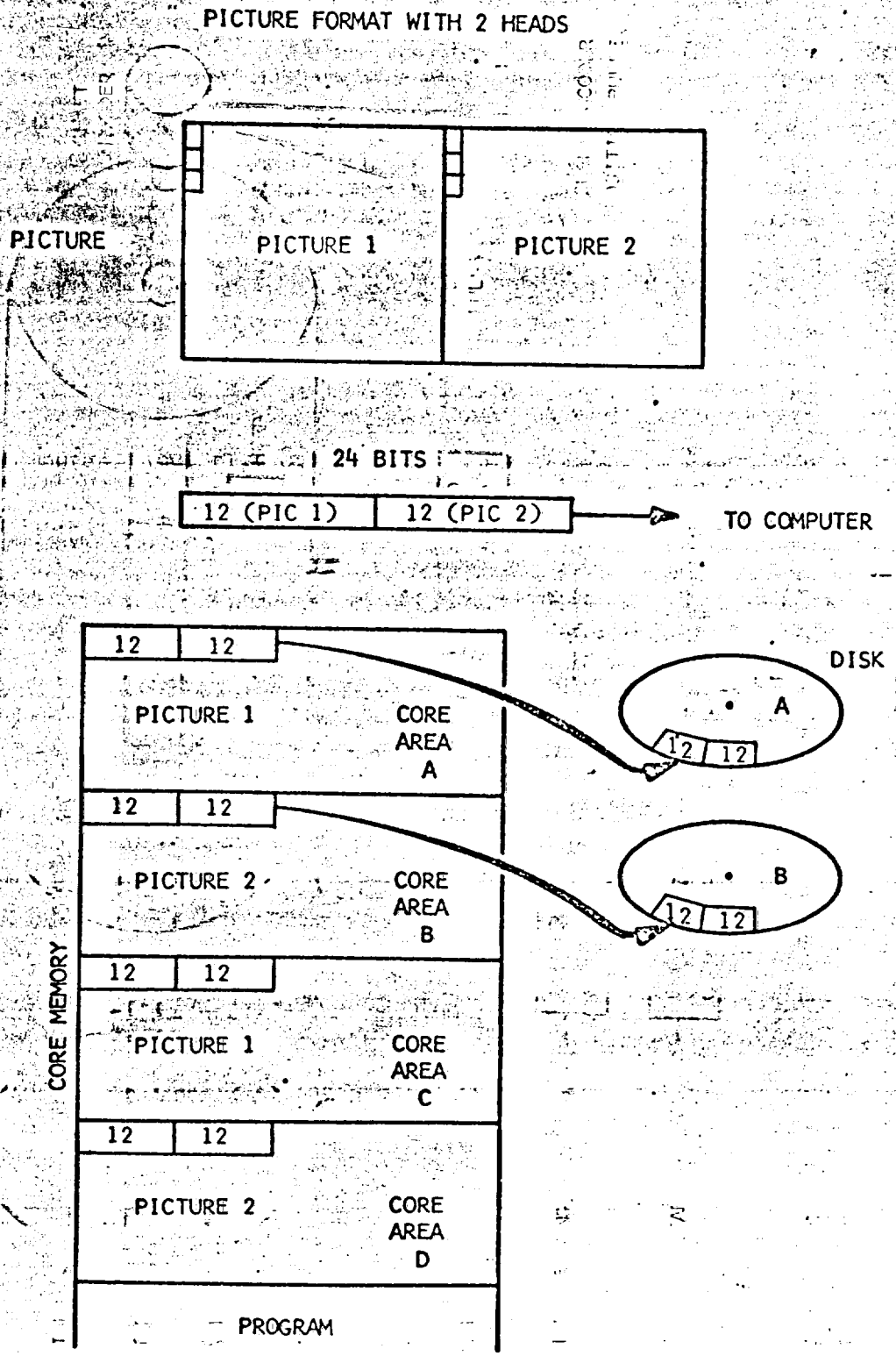

Fig. 9. Illustration of System for Interleaving the Two Halves of the Picture onto the Disc.

100345741

Source: https://www.industrydocuments.ucsf.edu/docs/qhdm0000

(a) FIDACSYS (FIDAC system). This system inputs the images into the computer from the scanning devices, and accomplishes overall picture manipulation and enhancement. The list of options and subroutines is too lengthy to give here, but we will illustrate a typical set of options available for reading from FIDAC or VIDIAC into the computer.

One part of the system is a general utility program for handling FIDAC pictures conveniently. It may be used to read FIDAC, VIDIAC, or DRIDAC, store pictures on tape and read pictures from tape, and allows several options such as specification of bits per spot from 1 to 6, and limited printing windows designated by using the joy stick. Up to fifty character sets are stored on disk "FIDACD" and any one may be called upon to print a picture. These character sets may be altered and the complete set may be listed for examination at any time. The program can be interactive with the computer console and MACDAC, and in this mode responds to one "command" at a time, and upon completion types the word "COMMAND?" In general, each command consists of two letters and two numbers.

A typical command is CB, change bits: this allows change of spatial density read from FIDAC and number of bits per spot. Spatial density may be any integer from 1 through 15. Bits per spot may be 1, 2, 3, 4, or 6. With this information, the computer determines whether an entire picture of this size will fit in memory. If it will not fit, the computer responds by requesting a window size to be pointed out on the MACDAC scope using the joy stick. This window is designated by indicating the width desired, and the computer responds by indicating the height allowed for that width by drawing the picture limits on the scope. This procedure may be repeated until the operator is satisfied with the area he will get. When satisfied, he pushes the END button, and the window is stored in memory. Often a picture size of exact dimensions is necessary, when reading a picture from tape, which could not be easily obtained by pointing on the scope. This may be specified as follows: when the computer has requested the joy stick coordinates for the top corners desired, push the INTERRUPT button. The computer will now ask for the exact number of spots per row. The number of lines is calculated and is not under the operator's control. The END button must be pushed to accept the results of this command, unless a non-zero number is typed after spots per row is typed.

Other commands are: CCnn, change characters; CS, change size; CW, change window; PC, print characters; WF, write on film in FIDAC (i.e., make a grey level negative on the FIDAC used as a "reverse" scanner); RFnn, read FIDAC; RTnnKK, read tape; SP, spectrum point; PPnnKK, print picture on high speed printer with a designated character set; WSnn, write on the MACDAC display unit; WTnnKK, write tape, and so forth.

For reading very large pictures (i.e., raster sizes of 2,000 x 2,000 spots) a special subprogram is required as follows. The subprogram "FIDPIC" reads a FIDAC picture into memory from the FIDAC, but retains only a specified window in memory. To do this, the program constantly monitors the address into which the picture is being read; when an undesired portion is being read, this address is altered to reference a "discard" area and that portion of picture is thus destroyed. Using this technique, the picture can be read, portion after portion, on successive scans, each scanned region stored on disc and thereby assembled as a complete picture which would have been too large to be stored in memory in its entirety.

Programs "FIDIND" and "REDUCE" are used in conjunction to read a 4 bit/spot picture from disc and convert to 2 bits/spot in memory with the resultant loss in grey levels, but gain in picture size capable of being stored.

10035742

Source: https://www.industrydocuments.ucsf.edu/docs/qndm0000

(b) SYNTAXSYS and BUGSYS Pattern Recognition Languages. These two systems present a large variety of basic pattern-recognition capabilities, including syntax-directed pattern recognition, feature-recognition methods, boundary-characterization techniques, etc. We have published extensively in the literature on these languages.

The SYNTAXSYS language uses an approach to pattern recognition based on some of R. S. Ledley's early original research into picture grammars. Consider a characterization of the boundary of an object in terms of five types of curves: a clockwise curve, type A; a relatively straight line, type B; a counterclockwise curve, type C; a notch, type D; and a wide clockwise curve, type E. Syntactical definitions of the different kinds of chromosomes can be made in such terms as these. A boundary is first characterized as a list of such curve types, and then the syntactical definitions are used to "build up" derived parts of a chromosome from combinations of these curve types. For example, the syntax for a submedium chromosome and a telocentric chromosome is shown in Table 1. The recursive definition

<arm> :: = B <arm> | <arm> B | A

means that the generic concept *arm* is defined as being a B type followed by an arm, or an arm followed by a B type or an A type. In this notation, the angular brackets < > indicate that a generic name is enclosed, the ":: =" means "is defined as being," and the "|" means "or." The definition is recursive in that it is used repeatedly. For example, consider our definitions applied to the figure ABC as follows:

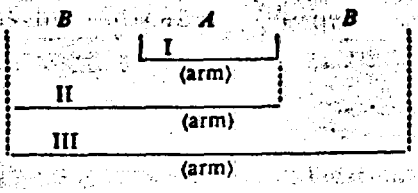

where we first (I) identify the A type as an *arm*, and then build up the arm by repeated application of the definition to include (II) the B type on the left and (III) the B type on the right. Further consideration of these concepts can be found in the references. (See Fig. 10.)

The process is, of course, systematic, and is carried out by a special program in the SYNTAXSYS system called the MOBILIZER [which is directly analogous to the "translator" of automatic-programming-language translation]. The mobilizer operates on a parts list for a particular object, and by using the generic syntactical description of various kinds of chromosomes "recognizes" the object as a chromosome or not a chromosome, and if a chromosome is recognized, as a particular kind of chromosome. Actually the mobilizer works with numbers: as shown in Table 1 the syntax can as well be written in terms of level numbers, where the numbers are assigned to the left-hand entities in the order in which they appear in the syntax. The basic parts, namely A, B, C, D, and E, are always considered to have number values less than any generic or "derived" part.

10035743

Source: https://www.industrydocuments.ucsf.edu/docs/qndm0000

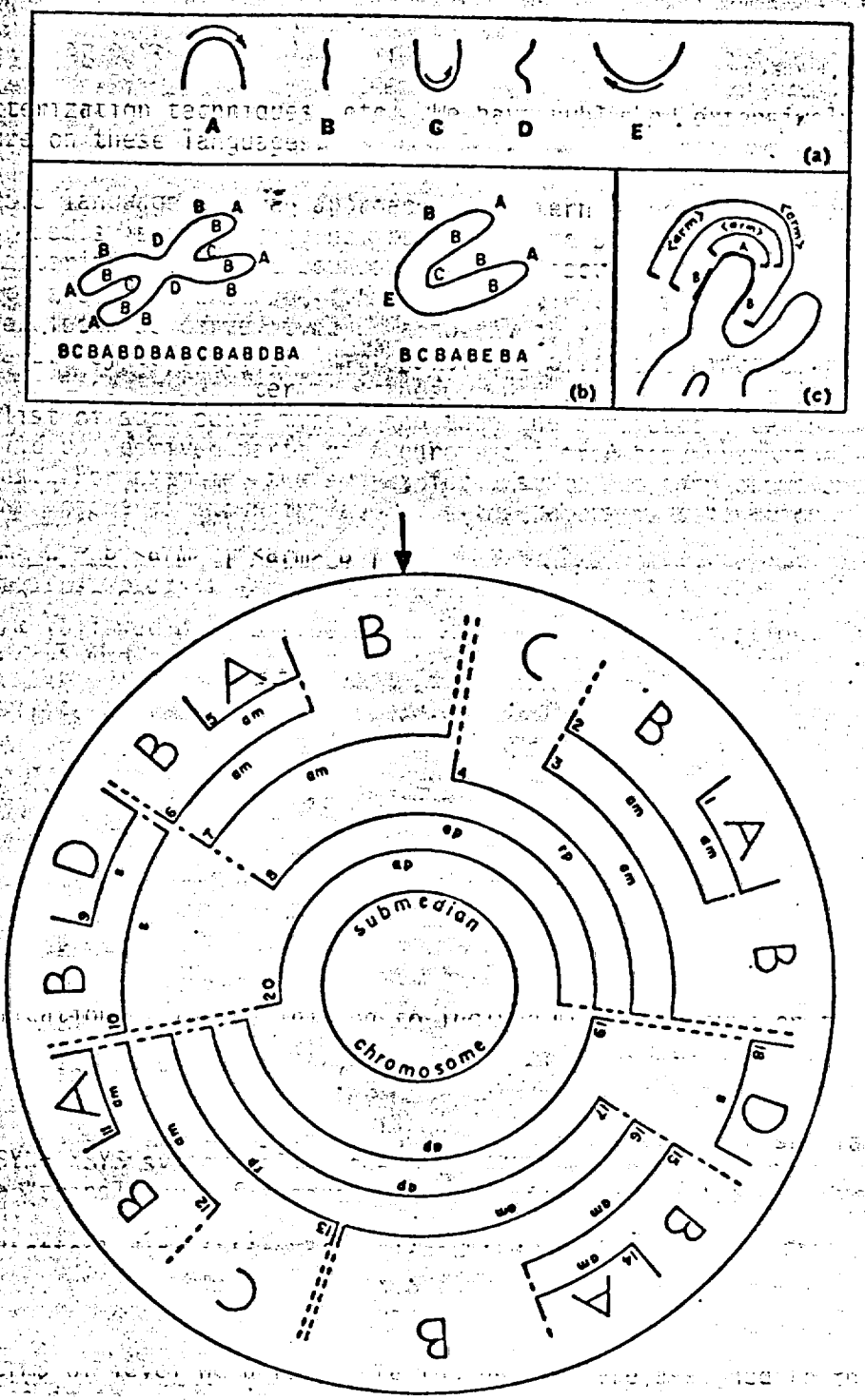

Fig. 10. (a) The basic types of curves used for the illustration in the text.

(b) Illustration of submedian and telocentric chromosomes.

(c) Short example used in text.

(d) Example of syntactical analysis or the build-up process followed in chromosome recognition for the chromosome shown in (b). Here *am* stands for <arm>, *rp* for <right part>, *ap* for <arm pair>, and *s* for <side>.

Source: https://www.industrydocuments.ucsf.edu/docs/qhdm0000

1003545744

Table 1. Sample syntax for submedian and telocentric chromosomes.

(arm) : : = *B* (arm) | (arm) *B*|*A*	70 : : = *B*,70|70,*B*|*A*
(side) : : = *B* (side) | (side) *B*|*B*|*D*	71 : : = *B*,71|71,*B*|*B*|*D*
(bottom) : : = *B* (bottom) | (bottom) *B*|*E*	72 : : = *B*,72|72,*B*|*E*
⟨right part⟩ : : = *C* (arm)	73 : : = *C*,70
⟨left part⟩ : : = (arm) *C*	74 : : = 70,*C*
⟨arm pair⟩ : : = (side) ⟨arm pair⟩ | ⟨arm pair⟩ (side)	75 : : = 71,75|75,71
| (arm) ⟨right part⟩ | ⟨left part⟩ (arm)	|70,73|74,70
⟨submedian chromosome⟩ : : = ⟨arm pair⟩⟨arm pair⟩	76 : : = 75,75
⟨telocentric chromosome⟩ : : = (bottom) ⟨arm pair⟩	77 : : = 72,75

V

The BUGSYS language is a picture-processing and -measuring programming language for the analysis of the picture in the computer's memory. The main concept of the system is the use of a collection of programmable pointers, which are visualized as a family of "bugs." A bug can be "initiated," or "placed," and once initiated a bug can be "moved." In addition, a bug can "change" the grey-level value of the spot on which it is located, and it can lay down a so-called "stick" across a thick line in the picture as an aid to locating the middle of the line. Also, two bugs together can "probe" along the direction of the line between them or along a direction perpendicular to the line between them. These probes can sense an extension of an object or the width of an object, and so forth. "Globs" of objects can be assessed by laying down squares and determining the percentage of the area of the square intersected with the object. The system is composed of many such statements as will be illustrated below. (See Fig. 11.)

For each bug initiated by means of the macro PLACE, there is associated a list which gives the x and y coordinates of the current position of that bug, the actual core location, the spot position within this location, and the grey-level value of the current position of the bug. For example, if the bug named "ZIPPY" is in the position x = 16, y = 8, then the list for ZIPPY might contain the following.

Address	Contents		Comment
ZIPPY(1)	16	*x*	
ZIPPY(2)	8	*y*	
ZIPPY(3)	6351	6000	(first location of picture)
		+350	[50 words per line × (*y* − 1)]
		+1	(*x* divided by 10 spots per word and truncated to an integer)
ZIPPY(4)	6		remainder of *x* divided by 10
ZIPPY(5)	4		gray-level value or contents of spot

As a bug is moved about the picture by a program, the list of the bug is kept current. In fact, in essence, this list *is* the bug.

We will now proceed to describe some of the statements of the BUGSYS language. The PLACE statement initiates, or sets up, a bug by assigning a name and initial coordinates to it. Thus we have

10035457745

Source: https://www.industrydocuments.ucsf.edu/docs/qndm0000

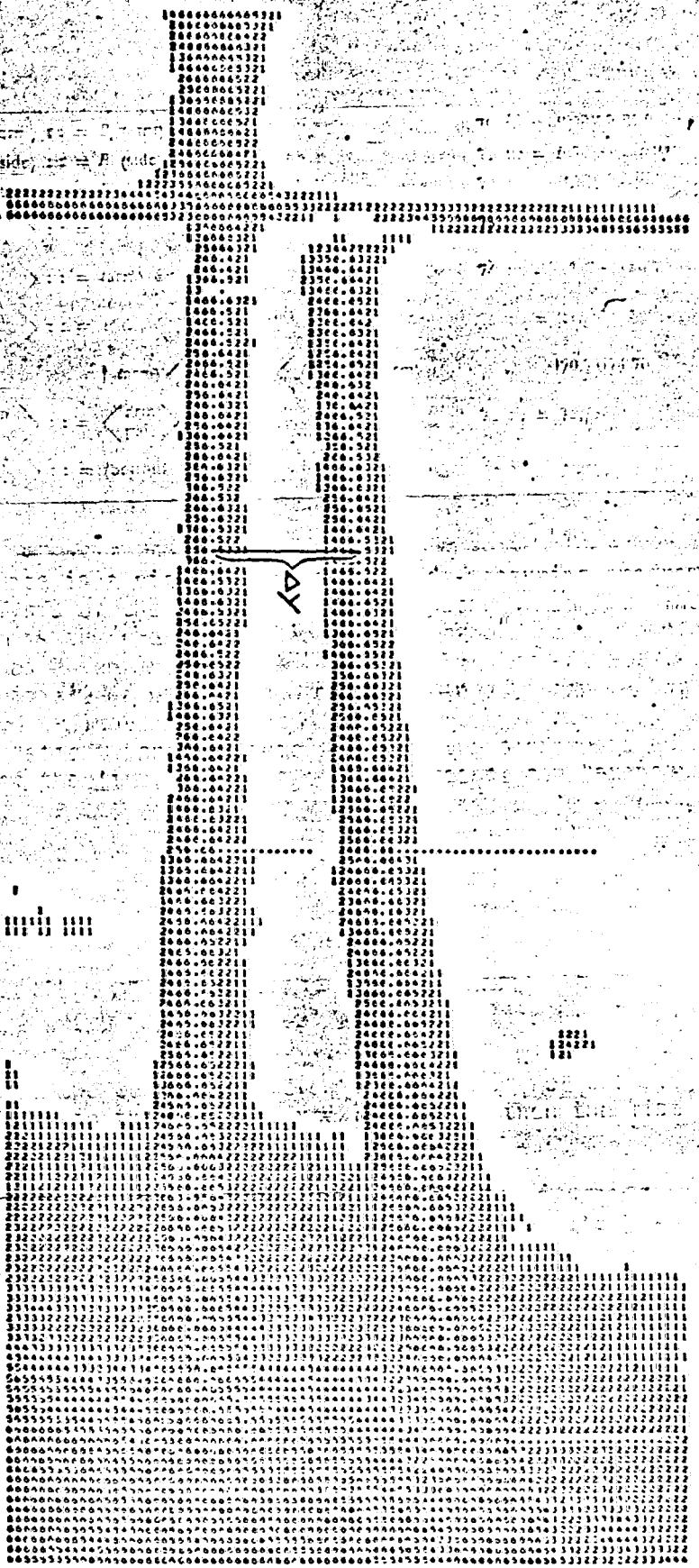

Fig. 11. Illustration of the Application of BUGSYS to Determining Successive y Coordinates of a Curve (taken from a Schlieren photograph). The dots illustrate the path of the bugs taken in making the successive Δy measurements.

100345746

Source: https://www.industrydocuments.ucsf.edu/docs/qhdm0000

<PLACE statement> :: = PLACE <bug name>, <x coordinate>, <y coordinate>

where the bug name is a FORTRAN label and the x and y coordinates are either unsigned integers or integer variables.

The BUGS statement allocates five storage locations to each bug named; its form is

<BUGS statement> :: = BUGS (<bug-name list>)

where the bug-name list is a string of bug names separated by commas.

A bug can be moved a specified distance (i.e., number of spots in the picture) in either the x or y direction by the following statement.

<MOVE statement> :: = MOVE <bug name>, <direction>, <distance>

where the direction is given by the literals LEFT, RIGHT, UP, or DOWN, and the distance is an unsigned integer or integer variable. The statement "MOVE ZIPPY, RIGHT, 15" moves the bug named ZIPPY to a new location having the same y coordinate but a new x coordinate 15 spots to the right of the present x coordinate. Each time a bug is moved, of course, the list corresponding to the bug name is adjusted for the new values.

Many of the statements involve multiple-way branches, for provision must be made to be sure that the bug will not be moved out of the picture. For instance, in the MOVE statement if the bug would be moved out of the picture, then it is not moved at all, and the next sequential instruction is taken as a next executed instruction. Otherwise (i.e., if the bug will still be in the picture after the move) the bug is moved and the next sequential instruction is skipped. The BUGSYS language also includes provisions for bounding an object. This is the same subprogram as the bounding routine which appears in the SYNTAXSYS system, except that in BUGSYS it can be utilized in a macro called BOUND.

(c) MACDACSYS (MACDAC system). This programming system implements the interactive capabilities of the MACDAC unit, including interrupt features for accepting information from, and displaying pictorial and alphanumeric information on, the MACDAC unit. Typical examples of operator interactive capabilities provided by the MACDACSYS system are as follows. Utilizing the joy stick in either regular or zoom mode, the operator can connect two points, erase an object, slice an object into two parts, and draw a "fence" or line around a collection of objects that are to be erased from the picture in the computer's memory. Also the "end of job," the "end of codes," and an "erase last code put in" commands are available. In many interactive-operator procedures, the objects displayed on the MACDAC display are numbered. The operator can point to one of the numbers to direct the computer to process in some way the associated object. To do this the joy stick is positioned with the cursor near the number and the "read spot" button is pressed. If the computer's bell rings (the IBM 360/44 has a programmable bell) then this tells the operator that the cursor is not close enough to the number. This method of having the computer signal the operator by means of the bell, or a series of coded bell rings, is used extensively in our interactive system.

1003545747

Source: https://www.industrydocuments.ucsf.edu/docs/qhdf0000

The MACDACSYS system is designed for capability of running in a time sharing or overlapping mode. In this mode, the picture being worked on has been placed on the MACDAC display directly from the scanners, and not from the computer. Thus the computer can be carrying out an entirely different computation with no picture at all, or a different picture, in its memory. The editing or interactive procedures carried out by the operator are stored in the computer's memory, the MACDACSYS interrupting the computer's computations from time to time as the operator is working. Then, at a later time when the operator actually scans the picture into the computer's memory, the directions given previously by the operator for editing the picture are now carried out.

(d) SPIDACSYS (SPIDAC system). This system automatically directs the motion of the SPIDAC microscope stage, detects good chromosome spreads, and records the coordinates (to the nearest 1.25μ) of the center of each such good chromosome spread. It also relocates the microscope stage at such coordinates, and directs the vidicon scan into the computer.

The SPIDACSYS software package consists of two parts. The first part is pertinent to the covering, detection, and locating centers of the objects of interest (e.g., chromosome spreads) during the search mode. The second part controls the stepping motors and moves the microscope stage such that these objects are centered automatically for detailed analysis during the analysis mode.

The complete operational procedure is as follows: The operator or the technician first puts the glass slide onto the microscope stage, selects the origin (usually left-upper corner of the cover slip), and turns to the low power object lens. At the same time, he loads the software package into the computer. When everything is ready, he pushes the start button and waits. Meanwhile, the hardware searches the successive fields of a strip, and then goes to the next strip, etc. until the forty strips have been searched field by field. In between searches the software program finds covers and determines centers of the objects of interest (e.g., chromosome spreads) in each field, and this information is saved for the analysis mode. An optional visual display is also included in the software program. This visual display puts all the coverings and domains of chromosome spreads on the MACDAC scope (or TV screen) for each field. (See Fig. 12.)

Next the operator or computer switches the objective lens from low power to high power. He then pushes the start button for the analysis mode. The computer program sends a signal to the hardware to move the microscope stage so that each of the objects found is successively centered under the objective lens. The hardware sends the detailed scan of each such object one by one onto a TV screen. The technician judges from the TV screen the acceptability of the object for analysis. If it is a bad one, he may reject it and the next object will be shown. If it is a good one, he may push the analysis button. This enables the fine scan of the object to be made and the object is analyzed by the computer. Then the next available object will be displayed. This procedure continues until all the objects have been processed. The software program then moves the microscope stage back to its original position and terminates the procedure.

(e) DOCS (Display Of Chromosome Statistics). The DOCS programming system enables on-line computer-console interaction with the disk memories of the computer for the evaluation and display of large masses of data in

10035745748

Source: https://www.industrydocuments.ucsf.edu/docs/qndm0000

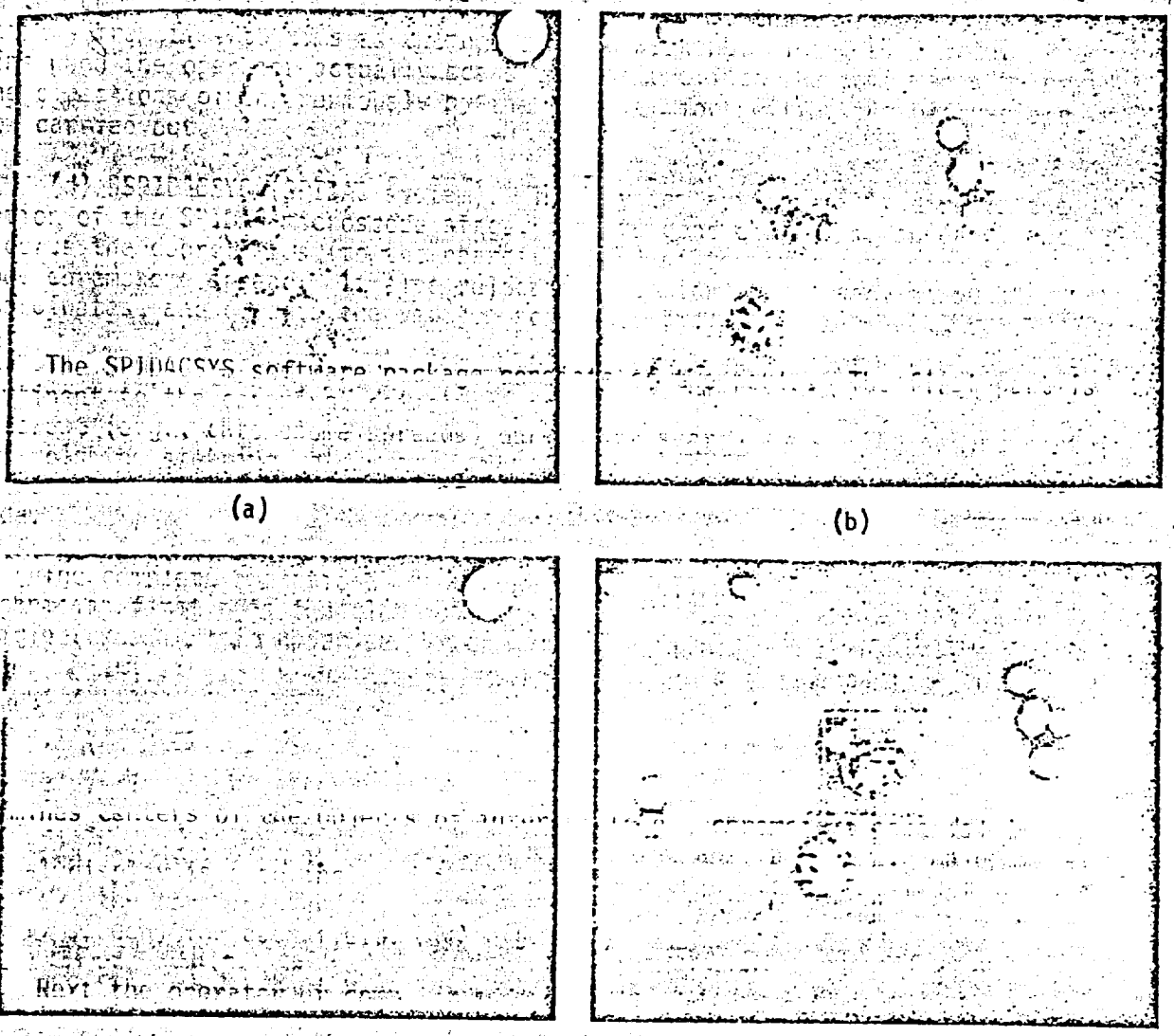

Fig. 12. Application of SPIDAC to Detecting Chromosome Spreads.

(a) Chromosome spread as seen on MACDAC display tube.

(b) Horizontal lines illustrate the recognition of the portion of a chromosome spread.

(c) Two chromosome spreads in a field.

(d) Result of computer locating each of the chromosome spreads.

1003545749

Source: https://www.industrydocuments.ucsf.edu/docs/qnam0000

a file. For instance, analyses of variance, t-tests, and other statistical tests can be executed on data selected from the file. The DOCS system guides the user in a step-by-step dialogue, so that all of the detailed specifications required for the desired statistical analysis or data display can be obtained.

(f) REMOTE. This programming system enables the remote user to be serviced by the computer.

REFERENCES

1. R. S. Ledley, Programming and Utilizing Digital Computers, New York: McGraw-Hill, ch. 8, 1962.

2. R. S. Ledley, M. Legator, and J. B. Wilson, "Automatic Determination of Mitotic Index," in Pictorial Pattern Recognition, G. C. Cheng et. al., Eds., Washington, D. C.: Thompson Book Co., 1968.

3. R. S. Ledley, "High-Speed Automatic Analysis of Biomedical Pictures," Science, vol. 146, no. 3641, pp. 216-223, October 9, 1964.

4. R. S. Ledley and F. H. Ruddle, "Chromosome Analysis by Computer," Scientific American, vol. 214, pp. 40-46, April 1966.

5. F. Ruddle, S. Smith, R. S. Ledley, and M. Belson, "Replication-Precision Study of Manual and Automatic Chromosome Analysis," Ann. N. Y. Acad. Sci., vol. 157, art. 1, pp. 400-423, March 31, 1969.

6. T. Golab, R. S. Ledley, and L. S. Rotolo, "FIDAC - Film Input to Digital Automatic Computer," Pattern Recognition, vol. 3, pp. 123-156, 1971.

10035457750

Source: https://www.industrydocuments.ucsf.edu/docs/qhdm0000